IAPMO IGC 354-2020a

PUBLIC REVIEW DRAFT

Industry Standard for

Pipe Lining Systems Employing Polyethylene Terephthalate (PET)

IAPMO Standard

Approval of an IAPMO Industry Standard requires verification by the Standards Review Committee that the standard has been developed in accordance with the policies and procedures for standards development (S-001, *Standards Development Process*, S-008, *Appeals* and S-011, *Operation of the IAPMO Standards Review Committee*). Although IAPMO administers the process and establishes rules to promote fairness in achieving consensus, it does not independently test, evaluate, or verify the content of standards.

Consensus is established when substantial agreement has been reached by directly and materially affected interests. Substantial agreement means much more than a simple majority, but not necessarily unanimity. Consensus requires that all views and objections be considered, and that a concerted effort be made toward their resolution.

The use of IAPMO Industry Standards is completely voluntary; their existence does not in any respect preclude anyone, whether they have approved the standards or not, from manufacturing, marketing, purchasing, or using products, processes, or procedures not conforming to the standards.

The Standards Review Committee has final authority on interpretation of any IAPMO Industry Standard. Moreover, no person save IAPMO designated staff shall have the right or authority to issue an interpretation of an IAPMO Industry Standard in the name of IAPMO. Requests for interpretations should be addressed to the secretariat or sponsor whose name appears on the title page of this standard.

CAUTION NOTICE: This IAPMO Industry Standard may be revised or withdrawn at any time. The policies and procedures require that action be taken periodically to reaffirm, revise, or withdraw this standard. Interested stakeholders of IAPMO Industry Standards may receive current information on all standards by signing up to receive updates and notices at the IAPMO Standards website www.IAPMOstandards.org.

Published by
International Association of Plumbing and Mechanical Officials (IAPMO)
4755 East Philadelphia Street, Ontario, California, 91761, USA
1-800-854-2766 • 1-909-472-4100

Visit the IAPMO Online Store at: www.IAPMOstore.org
Visit the IAPMO Standards website at: www.IAPMOstandards.org

Printed in the United States of America

Contents

Preface

This is the ~~second~~ third edition of IAPMO IGC 354, Pipe Lining Systems Employing Polyethylene Terephthalate (PET). This Standard supersedes IAPMO IGC 354-~~2019~~2020, Pipe Lining Systems Employing Polyethylene Terephthalate (PET). The previous editions of this standard ~~is~~are: August 2019, and January 2020

This Standard was developed by the IAPMO Standards Review Committee (SRC) in accordance with the policies and procedures regulating IAPMO industry standards development, Policy S-001, Standards Development Process. This Standard was approved as an IAPMO Industry Standard on January 13, 2020.

Notes:

(1) The use of the singular does not exclude the plural (and vice versa) when the sense allows.

(2) The use of IAPMO Standards is completely voluntary; their existence does not in any respect preclude anyone, whether he has approved the standards or not, from manufacturing, marketing, purchasing, or using products, processes, or procedures not conforming to the standards.

(3) This standard was developed using an open process and in accordance with IAPMO Standards Policy S-001, Standards Development Process*, which is available on the IAPMO Standards website (www.IAPMOstandards.org).*

(4) During its development, this Standard was made available for public review, thus providing an opportunity for additional input from stakeholders from industry, academia, regulatory agencies, and the public at large. Upon closing of public review, all comments received were duly considered and resolved by the IAPMO Standards Review Committee.

(5) This Standard was developed in accordance with the principles of consensus, which is defined as substantial agreement; consensus implies much more than a simple majority, but not necessarily unanimity. It is consistent with this definition that a member of the IAPMO Standards Review Committee might not be in full agreement with all sections of this Standard.

(6) Although the intended primary application of this Standard is stated in its scope, it is important to note that it remains the responsibility of the users of the Standard to judge its suitability for their particular purpose.

(7) IAPMO Standards are subject to periodic review and suggestions for their improvement will be referred to the IAPMO Standards Review Committee. To submit a proposal for change to this Standard, you may send the following information to the International Association of Plumbing and Mechanical Officials, Attention Standards Department, at standards@IAPMOstandards.org or, alternatively, at 4755 East Philadelphia Street, Ontario, California, 91761, and include "Proposal for change" in the subject line:

(a) standard designation (number);

(b) relevant section, table, or figure number, as applicable;

(c) wording of the proposed change, tracking the changes between the original and the proposed wording; and

(d) rationale for the change.

(8) Requests for interpretation should be clear and unambiguous. To submit a request for interpretation of this Standard, you may send the following information to the International Association of Plumbing and Mechanical Officials, Attention Standards Department, at standards@IAPMOstandards.org or, alternatively, at 4755 East Philadelphia Street, Ontario, California, 91761, and include "Request for interpretation" in the subject line:

(a) the edition of the standard for which the interpretation is being requested;

(b) the definition of the problem, making reference to the specific section and, when appropriate, an illustrative sketch explaining the question;

(c) an explanation of circumstances surrounding the actual field conditions; and

(d) the request for interpretation phrased in such a way that a "yes" or "no" answer will address the issue.

(9) IAPMO does not "approve", "rate", or endorse any item, construction, proprietary device, or activity.

(10) IAPMO does not take any position with respect to the validity of any patent rights asserted in connection with any items mentioned in this Standard and does not undertake to insure anyone utilizing this Standard against liability for infringement of any applicable patents, nor assumes any such liability. Users of this Standard are expressly advised that determination of the validity of any such patent rights, and the risk of infringement of such rights, are entirely their responsibility.

(11) Participation by federal or state agency representative(s) or person(s) affiliated with industry is not to be interpreted as government or industry endorsement of this Standard.

(12) Proposals for amendments to this Standard will be processed in accordance with the standards-writing procedures of IAPMO industry standards development, Policy S-001, Standards Development Process.

IAPMO Standards Review Committee

T. Collings	Building Services & Licensing - Retired Salt Lake City, Utah, USA	*Chair*
M. Durfee	Chief Building Official Saratoga Springs, Utah, USA	*Vice-Chair*
M. Antonacci	Plumbing Specialist, City of Toronto Woodbridge, Ontario, CAN	
R. Coffman	Mechanical Inspector, City of Cedar Falls - Retired Cedar Falls, Iowa, USA	
C. Crimmins	MN State Pipe Trades - Retired Champlin, Minnesota, USA	
J. Krahenbuhl	Plumbing and Mechanical Plans Check Specialist, Clark County - Retired Las Vegas, Nevada, USA	
B. Olinger	William Myers & Sons Inc. - Semi-Retired East Hanover, New Jersey, USA	
S. Peters	Plumbing & Mechanical Plans Examiner Santa Monica, California, USA	
B. Pfieffer	Plumbing Inspector Development Services, City of Topeka Topeka, Kansas, USA	
R. Rice	Sr. Mechanical Inspector - Retired Maplewood, Minnesota, USA	
G. Snider	Plumbing Section Supervisor, City of Surrey Surrey, British Columbia, CAN	
K. Thompson	IAPMO Ontario, California, USA	*Staff Liaison*
G. Istefan	IAPMO Ontario, California, USA	*Staff Liaison*
H. Aguilar	IAPMO Ontario, California, USA	*Secretary*

IAPMO IGC 354-2020a
Pipe Lining Systems Employing Polyethylene Terephthalate (PET)

1 Scope

1.1 General

1.1.1 This Standard covers pipe lining systems employing polyethylene terephthalate (PET) lining systems intended for use in water supply pipes ranging from DN 15 to 50 (½to 2 NPS) and specifies requirements for materials, physical characteristics, performance testing, and markings.

1.1.2 Polyethylene terephthalate (PET) pipe lining systems covered by this standard are intended for application in various pipe materials including but not limited to lead, copper, galvanized iron, steel, and plastic.

1.1.3 The lining is achieved by forming a thin-walled liner close-fitting to the interior of the existing pipe.
Note: *Information on the lining system, the installation of the pipe and the manufacture and quality assurance of the pipe, is provided in the Informative Appendices A, B and C respectively.*

1.2 Alternative Materials

The requirements of this Standard are not intended to prevent the use of alternative materials or methods of construction provided such alternatives meet the intent and requirements of this Standard.

1.3 Terminology

In this Standard,

(a) "shall" is used to express a requirement, i.e., a provision that the user is obliged to satisfy to comply with the Standard;
(b) "should" is used to express a recommendation, but not a requirement;
(c) "may" is used to express an option or something permissible within the scope of the Standard; and
(d) "can" is used to express a possibility or a capability.

Notes accompanying sections of the Standard do not specify requirements or alternative requirements; their purpose is to separate explanatory or informative material from the text. Notes to tables and figures are considered part of the table or figure and can be written as requirements.

1.4 Units of Measurement

SI units are the primary units of record in global commerce. In this Standard, the inch/pound units are shown in parentheses. The values stated in each measurement system are equivalent in application, but each unit system is to be used independently. All references to gallons are to U.S. gallons.

2 Reference Publications

This Standard refers to the following publications and, where such reference is made, it shall be to the current edition of those publications, including all amendments published thereto.

ASTM International

ASTM D1599
Standard Test Method for Resistance to Short-Time Hydraulic Pressure of Plastic Pipe, Tubing, and Fittings

ASTM D7091
Standard Practice for Nondestructive Measurement of Dry Film Thickness of Nonmagnetic Coatings Applied to Ferrous Metals and Nonmagnetic, Nonconductive Coatings Applied to Non-Ferrous Metals

ASTM E376
Standard Practice for Measuring Coating Thickness by Magnetic-Field or Eddy Current (Electromagnetic) Testing Methods

ASTM E797/E797M
Standard Practice for Measuring Thickness by Manual Ultrasonic Pulse-Echo Contact Method

AWWA (American Water Works Association)

AWWA M28
Rehabilitation of Water Mains, Third Edition

ISO (International Standards Organization)

ISO 11295
Classification and Information on Design and Applications of Plastics Piping Systems Used for Renovation and Replacement

ISO 11298-3
Plastics Piping Systems for Renovation of Underground Water Supply Networks - Part 3: Lining with Close-Fit Pipes

NSF International

NSF/ANSI/CAN 61
Drinking Water System Components - Health Effects

3 Definitions and Abbreviations

3.1 Definitions

The following definitions shall apply in this Standard:

Renovation — Work incorporating all or part of the original fabric of the pipeline by means of which its current performance is improved

Lining with Close-Fit Pipes — Lining with a continuous pipe for which the cross section is reduced to facilitate installation and reverted after installation to provide a close-fit to the existing pipe

Liner — Lining pipe after installation

Close-Fit — Situation of the outside of the inside liner relative to the inside of the existing pipeline, which may either be an interference fit or include a small annular gap resulting from shrinking and tolerances only

Interactive Pressure Pipe Liner — Liner which relies on the existing pipeline for some measure of radial support in order to resist without failure all applicable internal loads throughout its design life

Nominal Size — Numerical designation of the size of a component which is a convenient round number - approximately equal to the manufacturing dimension in millimeters - and is related to the outside diameter.

Simulated Installation — Installation of a lining system into a simulated host pipeline using representative equipment and processes, to provide samples for testing which are representative of an actual installation

Type Test — Test performed to prove that the material, component, joint or assembly is capable of conforming to the requirements given in a specification

Batch Release Test — A test performed by the manufacturer on a batch of component which has to be satisfactorily completed before the batch can be released

3.2 Abbreviations

The following abbreviations apply in this Standard:

DN — Nominal size based on outside diameter (in mm)

NPS — Nominal pipe size (in inches)

PET — Polyethylene terephthalate

4 General Requirements

4.1 Materials

PET pipe lining systems covered by this Standard shall be made of Polyethylene Terephthalate (PET) that complies with or exceeds the minimum requirements of this Standard.

4.2 PET Liner Characteristics

4.2.1 Stages

The PET pipe liner characteristics are considered in two stages:

(a) The manufactured stage (the manufactured pipe) or the "M" stage

(b) The installed stage (the installed liner) or the "I" stage"

4.2.1.1 The "M" stage is the condition of the pipes as supplied by the manufacturer and before any further installation process has taken place.

4.2.1.2 The "I" stage is the condition of the lining after the installation process has taken place.

4.2.1.3 The assessment of conformity (type testing, batch release testing) covered in Appendix C is conducted on pipe samples both in the "M" stage and the "I" stage.

4.2.2 Capabilities

4.2.2.1 The PET pipe liner shall have the capability to span holes and gaps when tested in accordance with Section 5.3.

4.2.2.2 The PET pipe lining system shall be capable of expansion from the "M" stage to the "I" stage with a rate between 1.6 and 2.5.

4.2.2.3 The PET liner shall create a continuous protective barrier, separating the potable water from the existing host pipe.

4.3 Toxicity

Materials and components of the PET pipe liner intended to convey or dispense water for human consumption through drinking or cooking shall comply with the applicable requirements of NSF/ANSI/CAN 61.

4.4 Lining Ratio

The ratio of the external diameter of the PET pipe liner in the "M" stage to the internal diameter of existing pipe shall be smaller than 0.6 and greater than 0.4.

4.5 Workmanship

After application (”I” stage) when viewed without magnification:

(a) The color of the PET pipe liner shall be natural opaque; and,

(b) The internal and external surfaces of the PET pipe liner:

(i) Shall be smooth, shiny, clean and free from scoring; and

(ii) There shall be no evidence of cavities or other defects, such as cracks, or significant amounts of waviness.

5 Testing Requirements

~~**5.1 Hydrostatic Pressure Test for Stand-Alone Pipe**~~

~~**5.1.1 Test Procedure**~~

~~The hydrostatic pressure test for the stand-alone pipe shall be conducted as follows:~~

~~Prepare a specimen from each size in the ”MI” stage;~~

~~(a) Cut and remove the host pipe without damaging the PET pipe liner;~~

~~Set up the test in accordance with ASTM D1599, procedure A;~~

~~(b) Ensure the connection on both ends of the pipe shall withstand the applied pressure; and~~

~~(c) Apply hydrostatic pressure for the referenced time period as indicated in Table 1.~~

~~**5.1.2 Performance requirements**~~

~~The specimens shall not leak or burst for the designated period of time indicated in Table 1.~~

~~5.4~~5.~~2~~1 Bendability and Expandability Test

~~5.4.1~~5.~~2~~1.1 Test Procedure:

The bendability and expandability test shall be conducted as follows:

(a) Prepare the host piping in accordance with Table 2~~3~~ and with a minimum of 2 x long sweep 90-degree bends and a straight length of pipe as shown in Figure 3;

(b) Install the pipe lining system in accordance with the manufacturer’s installation instructions to have the product in the “I” stage;

(c) Insert a cylindrical foam plug with a minimum diameter equal to the host pipe NPS and a minimum length of 31.8 mm (1.25 in) long;

(d) Apply air pressure of 552 ± 34 kPa (80 ± 5 psi) to the test specimen on the same side the foam plug was inserted;

(e) Maintain the pressure for 1 min; and

(f) Observe the other side of the specimen for the foam plug.

~~5.4.2~~5.1~~2~~.2 Performance Requirements

The plug shall pass through the specimen and emerge from the other end successfully.

5.2 Liner Thickness Test

5.2.1 Assembly and Preparation

~~The test assembly shall be set up for each liner installation as follows:~~ Conduct the test with the same test assembly used in Section 5.1 after the bendability and expandability test has been conducted.

~~(a) Using appropriate fittings to simulate an actual installation for the pipe material and application (e.g. CPVC processing/pressure pipe system);~~

~~(b) Connect five 3 m (10 ft) lengths of pipe;~~

~~(c) Install the PET pipe liner in accordance with the manufacturer's instructions to the minimum allowable thickness; and~~

~~(d) The lined pipes and fittings shall be allowed to cool down in accordance with the manufacturers installation instructions before use.~~

5.2.2 Test Procedure

The liner thickness shall be measured in accordance with ASTM D7091, ASTM E376, ASTM E797/E797M or as follows:

(a) Note the average wall thicknesses of the pipe and fittings before connection and assembly by measuring at least 5 locations, around the pipe and fitting openings and as far inside each as practical;

(b) Install the PET pipe lining system in accordance with the manufacturer's installation instructions;

(c) Remove and section the end fitting and at least one additional fitting from the assembly;

(d) Cut the fittings to obtain a section for measurement of the PET pipe liner (e.g. Bisect axially, longitudinally, or laterally to expose the original fitting thickness and the PET pipe liner to measurement); and

(e) Cut and remove at least six pipe specimens from various locations in the test assembly.

(i) Measure the external diameter of the ends of each test specimen (D1)

(ii) Measure the internal diameter of the ends of each test specimen (D3);

(iii) Measure the thickness of the pipe without the PET pipe liner (T1).

Note: *If the thickness of the pipe without the PET pipe liner is not clear the average thickness of the pipe measured prior to specimen preparation may be used as (T1).*

(iv) Determine the thickness of the PET pipe liner (T3) in accordance with Figure 1 and Equation 1.

Equation 1: $$T3 = \frac{(D1-D3)}{2} - T1$$

5.2.3 Performance Requirements

The minimum thickness of the PET pipe liner in the "I" stage on the pipe and fittings shall be in accordance with this equation 0.01 D2 < T3 < 0.05 D2 (see Figure 1 for demonstration).

5.3 Hole Span and Hydrostatic Burst Pressure Test

5.3.1 Test Procedure

The hole span test shall be conducted as follows:

(a) Prepare the host pipe with a minimum length of 750 mm (29.5 in) with holes in accordance with Table 1~~2~~ and equally distributed over the host pipe perimeter as shown in Figure 2;

(b) Install the pipe lining system in accordance with the manufacturer's installation instructions to have the product in the "I" stage;

(c) Fill the specimen with water and seal both ends with suitable end fittings; and

(d) Apply pressure in increments of 500 kPa (72.5 psi) until the pressure reaches 2.5 MPa (363 psi).

5.3.2 Performance Requirements

The specimen shall withstand at least 2.5 MPa (363 psi) without leaking or failing.

~~**5.4 Bendability and Expandability Test**~~

~~**5.4.1 Test Procedure:**~~

~~The bendability and expandability test shall be conducted as follows:~~

~~(a) Prepare the host piping in accordance with Table 3 and with a minimum of 2 x long sweep 90-degree bends and a straight length of pipe as shown in Figure 3;~~

~~(b)~~(a) ~~Install the pipe lining system in accordance with the manufacturer's installation instructions to have the product in the "I" stage;~~

~~(c)~~(a) ~~Insert a cylindrical foam plug with a minimum diameter equal to the host pipe NPS and a minimum length of 31.8 mm (1.25 in) long;~~

~~(d)~~(a) ~~Apply air pressure of 552 ± 34 kPa (80 ± 5 psi) to the test specimen on the same side the foam plug was inserted;~~

~~(e)~~(a) ~~Maintain the pressure for 1 min; and~~

~~(f)~~(a) ~~Observe the other side of the specimen for the foam plug.~~

~~**5.4.2 Performance Requirements**~~

~~The plug shall pass through the specimen and emerge from the other end successfully.~~

6 Markings and Accompanying Literature

6.1 Marking and Tagging

6.1.1 The PET material shall not be marked under any circumstance; however, the packaging of the pipe in "M" stage is to be marked as instructed below. The "I" stage liner must be tagged at entry of the structure and meter pit, if located outside of the structure.

6.1.2 Pipe Lining Systems employing Polyethylene Terephthalate (PET) complying with this Standard shall be marked/tagged with at least the following information:

(a) Manufacturer's name;
(b) Trademark;
(c) IAPMO IGC 354;
(d) NSF/ANSI/CAN 61 for application in lining potable water services;
(e) Length;
(f) Internal diameter range host pipe;
(g) Production date & maximum date of usage; and
(h) Batch number.

6.2 Packaging

The PET pipe liner shall be:

(a) Wound on coils and the coils of pipe shall be strapped at regular intervals; and
(b) Packaged in the "M" stage and boxed or otherwise covered sufficiently to protect against UV exposure prior to use.

6.3 Accompanying Literature

Pipe Lining Systems employing Polyethylene Terephthalate (PET) complying with this Standard shall be accompanied by instructions for their installation, care and maintenance, and repair, specifying at least the following:

(a) Requirements for the installation company, including;
  (i) The qualification for working in the respective application; and
  (ii) Work carried out by installation personnel certified by the pipe lining system owner;
(b) Requirements for the installation equipment, for a quality and environmentally compatible execution of the installation, including/respecting:
  (i) The national regulations regarding
    1. safety;
    2. noise protection; and
    3. preservation of clean of air, ground and water.
  (ii) The technical requirements set by the pipe lining system owner; and
  (iii) Checks and controls of the equipment a regular time base and documented.
(c) Requirements for the materials used, shall be in accordance with the specification of the pipe lining system owner;
(d) Requirements for the existing pipe, including:
  (i) It shall have sufficient rest strength (for the interactive liner); and
  (ii) It shall be accessible and cleanable to allow insertion of the PET pipe
(e) Requirements for the installation process, where the content of the installation manual provided by the pipe lining system owner shall be respected.

~~**Table 1**~~

~~**Minimum Pressure Requirements for the Stand-Alone Hydrostatic Pressure Test**~~

~~(See Section 5.1.1 and 5.1.2)~~

~~**Pipe Size**~~ ~~DN (NPS)~~	~~**Pressure**~~ ~~MPa (psi)~~	~~**Duration**~~ ~~seconds~~
~~7 (3/16)~~	~~2.9 (425)~~2.6 (380)	~~71~~60
~~10 (3/8)~~	~~3.2 (460)~~2.8 (410)	~~69~~60
~~15 (1/2)~~	~~3.8 (550)~~3.4 (495)	~~69~~60
~~20 (3/4)~~	~~1.8 (260)~~1.6 (230)	~~60~~60

Table 1~~2~~

Host Pipe Requirements for Hole Spanning Test

(See Section 5.3.1)

Liner~~Pipe~~ Size DN (NPS)	**Diameter x wall thickness host pipe** mm (in)	**Hole Size** mm (in)
7 (3/16)	16.0 x 1.3 (0.63 x 0.05)~~21 x 3.0 (0.83 x 0.12)~~	10.5 (0.4)
10 (3/8)	22.4 x 1.8 (.88x 0.07)~~27 x 3.5 (1.06 x 0.14)~~	15 (0.6)
15 (1/2)	35.1x 1.8 (1.38 x 0.07)~~42 x 3.5 (1.65 x 0.14)~~	23 (0.9)
20 (3/4)	54.1 x 2.0 (2.13 x 0.08)~~49 x 3.5 (1.93 x 0.14)~~	30 (1.2)

Table 2~~3~~

Host Pipe Requirements for Bendability and Expandability Test

(See Section ~~5.4.1~~5.1~~2~~.1)

Liner~~Pipe~~ Size DN (NPS)	**Diameter x wall thickness host pipe** mm (in)	**Approximate Radius bends** mm (in)	**Length of straight pipes** m (ft)	~~**Total length**~~ ~~m (ft)~~
7 (3/16)	16.0 x 1.3 (0.63 x 0.05)~~21 x 3.0 (0.83 x 0.12)~~	~~225~~ 254 ~~(8.9)~~ 10	~~18 (59)~~1.5 (5)	~~20 (66)~~
10 (3/8)	22.4 x 1.8 (.88x 0.07)~~27 x 3.5 (1.06 x 0.14)~~	~~275~~305 (~~10.8~~ 12)	~~18 (59)~~1.5 (5)	~~24 (79)~~
15 (1/2)	35.1x 1.8 (1.38 x 0.07)~~42 x 3.5 (1.65 x 0.14)~~	~~375~~ 381(~~14.8~~ 15)	~~18 (59)~~1.5 (5)	~~21 (69)~~
20 (3/4)	54.1 x 2.0 (2.13 x 0.08)~~49 x 3.5 (1.93 x 0.14)~~	~~450~~ 457 (~~17.8~~ 18)	~~12 (39)~~1.5 (5)	~~13 (43)~~

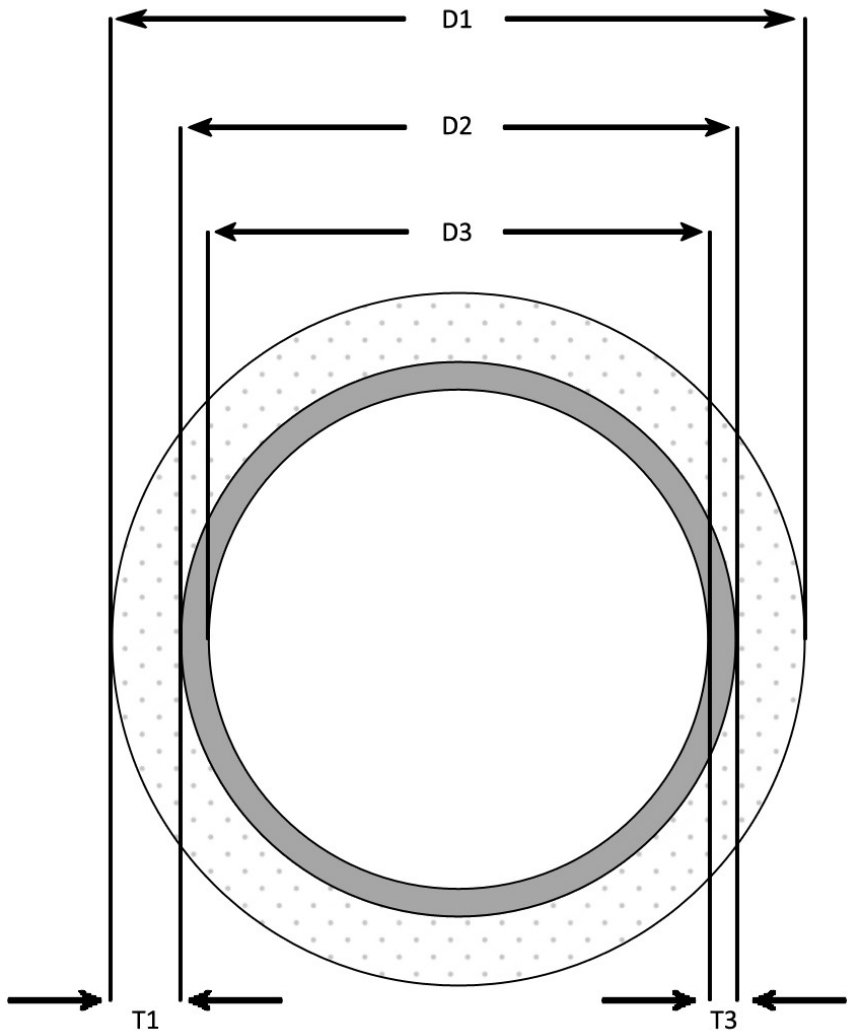

Figure 1
PET Liner Thickness Dimensions
(See Sections 5.2.2, and 5.2.3)

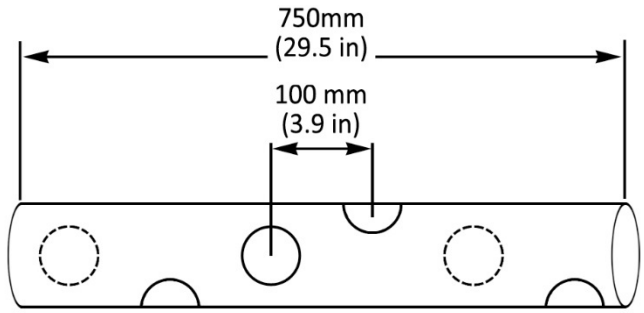

Figure 2
Hole Spanning Host Pipe Demonstration
(See Section 5.3.1)
Note: *6 circular holes distributed evenly over the 750 mm (29.5 in) pipe perimeter.*

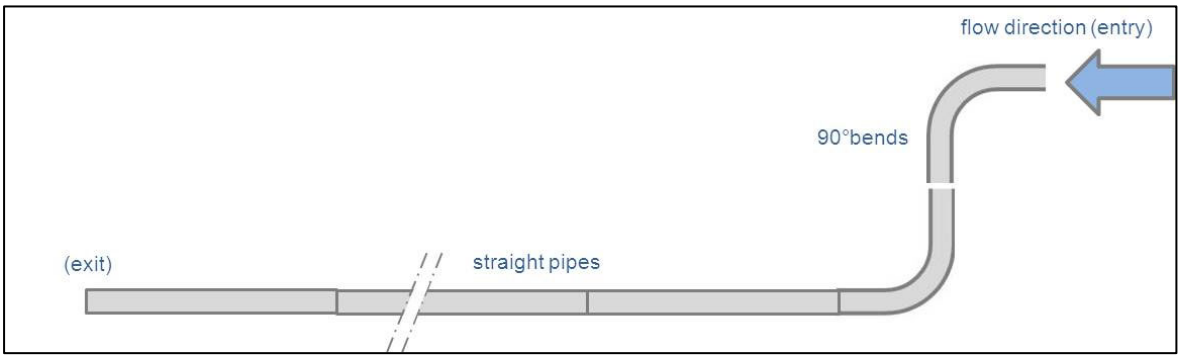

Figure 3
Schematic Representation of Host Pipe for Testing Bendability and Expandability
(See Section ~~5.4.1~~5.1~~2~~.1)

Appendix A (Informative)
System Information

A.1 System

The system may use a small-sized, longitudinally ribbed thermoplastic PET pipe, which should be able to expand radially to at least twice its diameter. The small size and the flexible character of the PET material should enable easy insertion into the existing water service pipeline. Once inserted, the PET pipe should be heated and pressurized with hot water, causing the pipe to expand to its final shape, close-fit in accordance with ISO 11298-3 with the inside of the existing water service pipeline.

The process is schematically represented in Figure A.1.

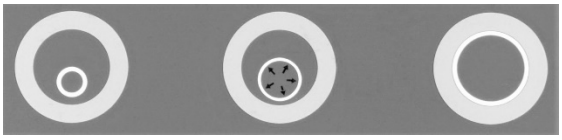

Figure A.1
Liner Phases

The result should be a thin-walled liner, close-fit inside the old service pipe:
(a) Creating a protective barrier (preventing pollution of the potable water);
(b) Restoring the tightness of the old service pipe; and
(c) Increasing the flow properties of the water service pipe.

A.1.2 The system should only be applied to create a liner depending on the existing pipe for its structural support. After expansion it should be considered as a liner which interacts with the existing pipe in this respect: an interactive pressure pipe liner Class B according to the definition in ISO 11295 or a semi-structural liner Class III according to the definition in AWWA M28.

Note: *A properly designed and installed PET liner has sufficient strength on its own (without support of the existing pipe) to resist operating internal pressures up to 8 bar for 50 years and its strength is comparable to that of a commonly used PVC-U or PE service pipe. The existing pipe, however, is required to provide stiffness. The thin-wall PET liner would collapse under external loading when not supported.*

A.1.3 The PET liner should have the capability to span holes and gaps, e.g. because of pit corrosion, and the system supplier should demonstrate this, both in type testing and batch release testing.

A.2 PET Materials

Pipe lining systems covered by this Standard should be made of Polyethylene Terephthalate (PET). The material supplier should make available a Quality Assurance report of the material batch.

A.2.1 The material should be delivered sealed against external influences either in {e.g. 25 kg (55 lb)} bags or in properly sealed octa-bins {e.g. 650 kg (1430 lb)}.

A.2.2 Only virgin material should be used. The use of reprocessable material is not allowed.

A.2.3 To enable proper processing of the PET material during manufacturing of the pipe, a dedicated dryer is a necessity.

Appendix B (Informative)
Installation

B.1 Installation Process

The pipe lining system should incorporate installation equipment which should be operated in accordance with the technique's specification as laid down in the installation manual that should be provided by the manufacturer/system owner.

Note: *The installation equipment consists of:*

(a) a fully automated expansion unit (incl. water tank, heating unit and control);
(b) auxiliary heating unit; for heating & expansion performance and efficiency
(c) a set of insulated hoses; for circulation of hot water and air
(d) an air compressor; for air circulation and expansion
(e) cleaning tools; for cleaning the host pipe
(f) installation fittings; for adapting to the circulation hoses and host pipe
(g) dedicated tools (e.g. pulling heads) for the insertion of the PET liner
(h) air gun – apparatus used in stringing and cleaning the existing host pipe
(i) flaring extension connector

B.1.2 The sequential steps in the installation process steps should be:

(a) Preparation

The water pressure should be turned off and then the existing pipe has to be disconnected at both ends at the water main and the water meter or other connection point in the house.

(b) Cleaning

The internal bore of the existing pipe should be cleaned with a method appropriate to the material and condition of the existing pipe. With lead pipes cleaning with compressed air in combination with non-abrasive foam plugs may be sufficient, whilst with galvanized iron pipes mechanical tools are required, such as pull-through wire brushes or mandrels.

(c) Insertion

In this step, the small diameter PET pipe is pushed or pulled into the existing pipe. To this end it might be necessary to have a line inside to the host pipe to be able to pull the liner through the host pipe. This line can be brought when blowing air through the pipe. The fact that the PET pipe is flexible facilitates accommodating long sweep bends.

(d) Expansion

The PET pipe should be connected to the expansion unit and auxiliary heating unit, which should be equipment that regulates the heating of the PET pipe by flushing hot water through it which will start to expand the pipe and cool it down afterwards.

(e) Installation check (optional)

The liner may be checked on proper expansion by using the same type of foam plugs and (oil filtered) compressed air as applied in cleaning (B.1.2 (b));

(f) Reconnecting

The lined existing pipe should be reconnected to existing network components: to the water main and to the water meter or other connection point in the house. Reconnection should be done in such a manner that tightness is ensured and contact between the existing pipe and the potable water is prohibited.

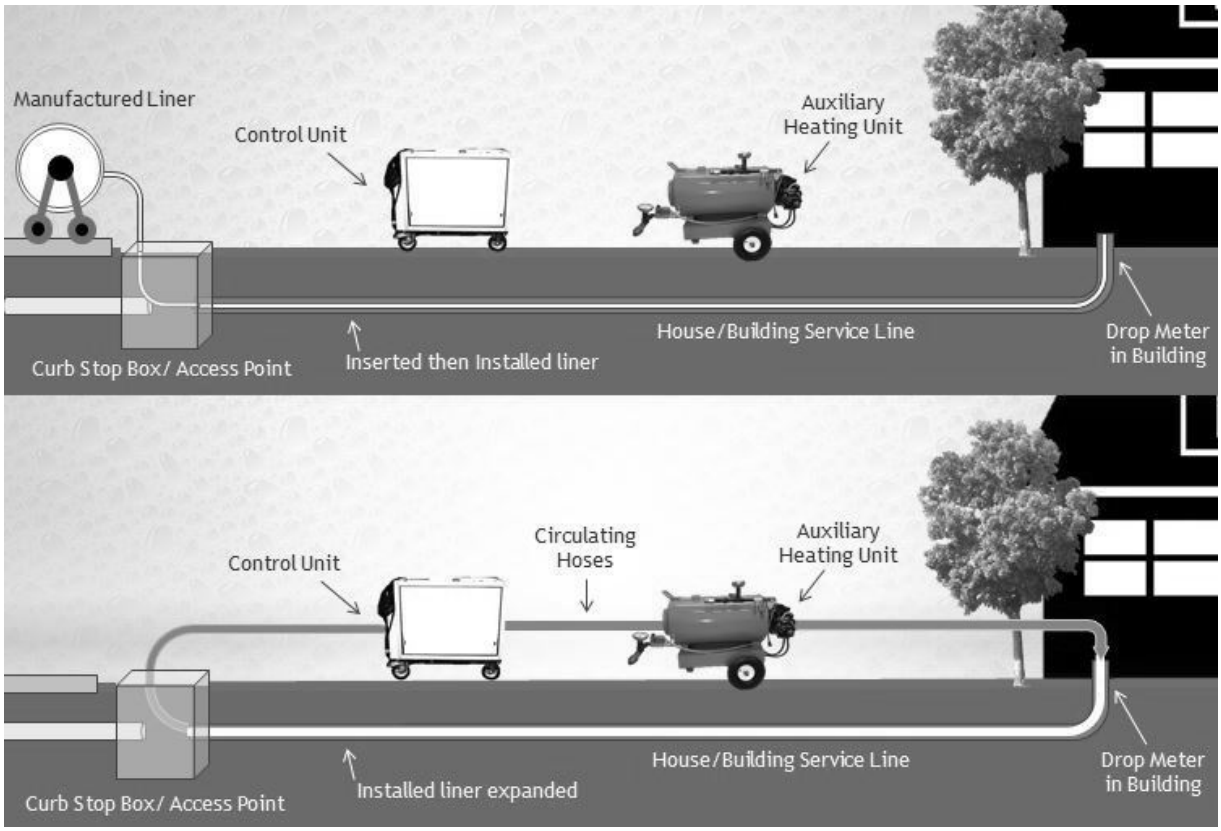

Figure B.1
Installation Phases (Schematically)

B.1.3 The system supplier should provide an installation manual which details all of the procedures required to carry out the work. The installation manual should specify the method of installation, including the equipment, new pipe termination and reconnection to the existing network and customer service pipes, inspection and testing, and key process parameters according to the requirements of the particular technique described, declaring relevant values and tolerances in each case.

B.1.4 The installer should ensure that the rehabilitation process should not damage any adjacent infrastructure and shall employ competent, trained staff with appropriate certification, to carry out the work. The installation staff should be trained in the relevant lining system and fully conversant with the procedures documented in the installation manual.

B.1.5 Safety requirements should be identified for all stages of the installation procedure, from preparation of the access to the completion of the work.

B.1.6 Lining termination should include operations, such as dismantling of the installation system and preparing the ends of the installed lining system for subsequent reconnection.

B.1.7 Compression fittings, stab fittings, or PET liner end seal fittings should be used at each end of the lined section to make a mechanical connection to the outside of the existing pipe and to seal against the liner. An effective barrier between the water supply and the wall of the existing pipe should thereby be provided. The system owner should list the types of fittings that are compatible with his system in the documentation.

Appendix C (Informative)
Manufacturing and Quality Assurance

C.1 Assessment of Conformity

C.1.1 Type Testing (TT)

Type testing should demonstrate that the products comply with all the characteristics in Table C.1 and should be performed using the sampling frequency given in Table C.1.
For the requirements, test parameters and test methods, reference is made to previous (sub) chapters of this Standard.

Table C.1: Type Testing

Characteristic		**Reference to (sub) Clause**	**Minimum Sampling Frequency** [1]
Material	Type	4.1	1x / material
Pipe / Lining	Appearance / color	4.5	1x / size
	Packaging	6.2	1x / size
	Dimensions "M" stage	Table D1, D2	1x / size
	Bendability	5.4	1x / size
	Expandability	5.4	1x / size
	Hole spanning capability	5.3	2x / size
	Effect on water quality [2]	4.3	1x / yr
	Marking	6.1	1x / size
(1) number of test specimen 1 and number of measurements 1 *(2)* for potable water applications only			

C.1.2 Batch Release Testing (BRT)

Batch release testing should be carried out to check upon the quality in individual production runs and should demonstrate that the products comply with all the characteristics in Table C.2 and should be performed using the sampling frequency given in Table C.2.
For the requirements, test parameters and test methods, reference is made to previous (sub) chapters of this Standard.

Table C.2: Batch Release Testing

Characteristic		**Reference to (sub) Clause**	**Minimum Sampling Frequency** [1]
Material	Type	4.1	1x / batch
Pipe / Lining	Appearance / color	4.5	every coil
	Packaging	6.2	every coil
	Dimensions "M" stage	Table D1, D2	every coil
	Bendability [2]	5.4	1x / size
	Expandability [2]	5.4	1x / size
	Hole spanning capability [2]	5.3	2x / size
	Marking	6.1	every coil
(1) number of test specimen 1 and number of measurements 1 *(2)* 72 h after manufacture			

Appendix D (Informative)
Determination of Geometric Characteristics of The Pipe

D.1 General

For determining the geometric characteristics, samples should be taken randomly from the manufactured batch. Measures should only be taken at least 24 h after manufacture, with the last 4 h the test pieces conditioned at 23°C ± 2°C (73°F ± 4°F) before testing.

D.2 Inside Diameter

The inside diameter of the pipe should be determined with "go / no-go" plugs, as given in Table D.1

Passing the plugs successfully ensures compliance with the requirement set in Table D.1.

Table D.1: Plug Dimensions

Nominal Size PET Pipe mm (in)	**Plug Dimension mm (in)**	
	minimum	maximum
7 (0.28)	5.55 (0.218)	5.85 (0.230)
10 (0.39)	8.05 (0.317)	8.35 (0.329)
15 (0.59)	12.05 (0.474)	12.55 (0.494)
20 (0.79)	16.10 (0.634)	16.70 (0.657)

D.3 Wall Thickness

The wall thickness should be measured with a dedicated caliper and should comply with Table D.2

Table D.2: Wall Thickness

Nominal Size PET Pipe mm (in)	**Wall Thickness** mm (in)
7 (0.28)	$0.60^{+0.10}$ ($0.024^{+0.004}$)
10 (0.39)	$0.83^{+0.12}$ ($0.033^{+0.005}$)
15 (0.59)	$1.25^{+0.20}$ ($0.049^{+0.008}$)
20 (0.79)	$1.66^{+0.14}$ ($0.066^{+0.006}$)